DS-2CD2735FWD-IZS
3 MP IR Vari-focal Dome Network Camera

Key Features

- 1/2.8" Progressive Scan CMOS
- 2048 × 1536 @30fps
- Powered by Darkfighter
- H.265, H.265+
- 120dB WDR
- IP67, IK10
- IR range: up to 30 m
- BLC/3D DNR/ROI/HLC
- Smart encoding: Support low bit rate, low latency
- 4 behavior analyses and face detection
- Color: 0.005 Lux @ (F1.2, AGC ON), 0 Lux with IR
  Color: 0.0089 Lux @ (F1.6, AGC ON), 0 Lux with IR

Specifications

Camera	
Image Sensor	1/2.8" Progressive Scan CMOS
Min. Illumination	Color: 0.005 Lux @ (F1.2, AGC ON), 0 Lux with IR Color: 0.0089 Lux @ (F1.6, AGC ON), 0 Lux with IR
Shutter Speed	1/3 s to 1/100,000 s
Slow Shutter	Yes
Day & Night	IR Cut Filter
Digital Noise Reduction	3D DNR
WDR	120dB
3-Axis Adjustment	Pan: 0° to 355°, tilt: 0° to 75°, rotate: 0° to 355°
Lens	
Focal length	2.8 to 12 mm
Aperture	F1.6
Focus	Auto
FOV	Horizontal field of view: 97° to 33° Vertical field of view: 69° to 25° Diagonal field of view: 130° to 41°
Lens Mount	Φ14
IR	
IR Range	Up to 30 m
Wavelength	850nm
Compression Standard	
Video Compression	Main stream: H.265/H.264 Sub stream: H.265/H.264/MJPEG Third stream: H.265/H.264
H.264 Type	Main Profile/High Profile
H.264+	Main stream supports
H.265 Type	Main Profile
H.265+	Main stream supports
Video Bit Rate	32 Kbps to 16 Mbps
Audio Compression	G.711/G.722.1/G.726/MP2L2/PCM
Audio Bit Rate	64Kbps(G.711)/16Kbps(G.722.1)/16Kbps(G.726)/32-192Kbps(MP2L2)
Smart Feature-set	
Behavior Analysis	Line crossing detection, intrusion detection, unattended baggage detection, object removal detection
Exception Detection	Scene change detection
Face Detection	Yes
Region of Interest	Support 1 fixed region for main stream and sub stream
Image	
Max. Resolution	2048 × 1536
Main Stream	50Hz: 25fps (2048 × 1536, 1920 × 1080, 1280 × 720) 60Hz: 30fps (2048 × 1536, 1920 × 1080, 1280 × 720)
Sub Stream	50Hz: 25fps (640 × 480, 640 × 360, 320 × 240) 60Hz: 30fps (640 × 480, 640 × 360, 320 × 240)

Third Stream	50Hz: 25fps (1280 × 720, 640 × 360, 352 × 288) 60Hz: 30fps (1280 × 720, 640 × 360, 352 × 240)
Image Enhancement	BLC/3D DNR/HLC
Image Setting	Rotate mode, saturation, brightness, contrast, sharpness adjustable by client software or web browser
Day/Night Switch	Day/Night/Auto/Schedule/Triggered by Alarm In
Network	
Network Storage	Support Micro SD/SDHC/SDXC card (128G), local storage and NAS (NFS,SMB/CIFS), ANR
Alarm Trigger	Motion detection, video tampering, network disconnected, IP address conflict, illegal login, HDD full, HDD error, Alarm input, Alarm output
Protocols	TCP/IP, ICMP, HTTP, HTTPS, FTP, DHCP, DNS, DDNS, RTP, RTSP, RTCP, PPPoE, NTP, UPnP, SMTP, SNMP, IGMP, 802.1X, QoS, IPv6, Bonjour
General Function	One-key reset, anti-flicker, three streams, heartbeat, password protection, privacy mask, watermark, IP address filter
Firmware Version	V5.5.52
API	ONVIF (PROFILE S, PROFILE G), ISAPI
Simultaneous Live View	Up to 6 channels
User/Host	Up to 32 users 3 levels: Administrator, Operator and User
Client	iVMS-4200, Hik-Connect, iVMS-5200
Web Browser	IE8+, Chrome 31.0-44, Firefox 30.0-51, Safari 8.0+
Interface	
Audio	1 input (line in, 3.5 mm), 1 output(3.5 mm), mono sound
Communication Interface	1 RJ45 10M/100M self-adaptive Ethernet port
Alarm	1 input, 1 output (max. 12 VDC, 30 mA)
Video Output	1Vp-p composite output (75 Ω/BNC) (For adjustment only)
On-board storage	Built-in Micro SD/SDHC/SDXC slot, up to 128 GB
SVC	Support H.264 and H.265 encoding
Reset Button	Yes
Audio	
Environment Noise Filtering	Yes
Audio Sampling Rate	8kHz/16kHz/32kHz/44.1kHZ/48kHz
General	
Operating Conditions	-30 °C to +60 °C (-22 °F to +140 °F), Humidity 95% or less (non-condensing)
Power Supply	12 VDC ± 25%, PoE (802.3af) Terminal block for DC input
Power Consumption and Current	12 VDC, 0.75A, max. 9.5W PoE (802.3af, 36V to 57V), 0.3A to 0.1A, max. 11W
Protection Level	IP67, IK10
Material	Metal
Dimensions	Φ153.4 × 133.1 mm (Φ6.04" × 5.24")
Weight	Camera: 1287 g (2.84 lb.)

Available Model:

DS-2CD2735FWD-IZS

Dimensions

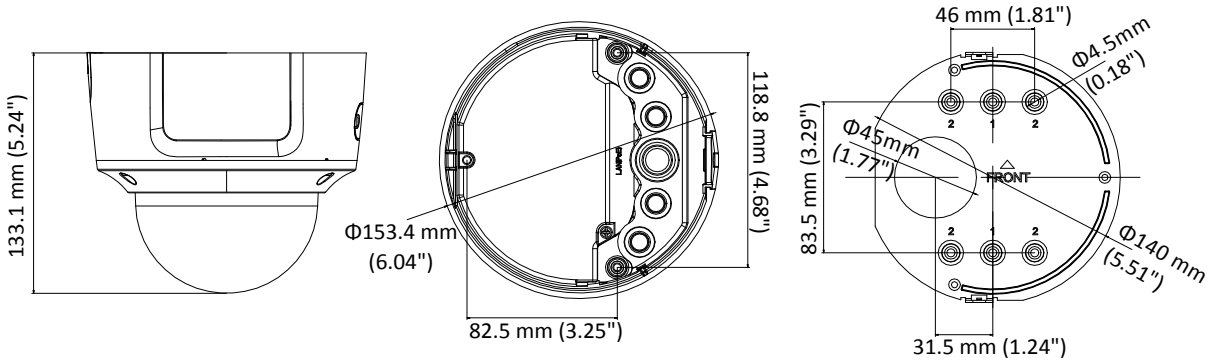

Accessories

DS-1471ZJ-155

Pendant Mount

DS-1473ZJ-155

Wall Mount

DS-1475ZJ-SUS

Vertical Pole Mount

DS-1476ZJ-SUS

Corner Mount

Distributed by DS-1227ZJ-DM37

In-ceiling Mount

Headquarters
No.555 Qianmo Road, Binjiang District,
Hangzhou 310051, China
T +86-571-8807-5998
overseasbusiness@hikvision.com

Hikvision USA
T +1-909-895-0400
sales.usa@hikvision.com

Hikvision Europe
T +31-23-5542770
sales.eu@hikvision.com

Hikvision UK & Ireland
T +01628-902140
sales.uk@hikvision.com

Hikvision UAE
T +971-4-4432090
salesme@hikvision.com

Hikvision Russia
T +7-495-669-67-99
saleru@hikvision.com

Hikvision Australia
T +61-2-8599-4233
salesau@hikvision.com

Hikvision Italy
T +39-0438-6902
info.it@hikvision.com

Hikvision South Africa
Tel: +27 (10) 0351172
sale.africa@hikvision.com

Hikvision Singapore
T +65-6684-4718
sg@hikvision.com

Hikvision Korea
T +82-(0)31-731-8817
sales.korea@hikvision.com

Hikvision India
T +91-22-28469900
sales@pramahikvision.com

Hikvision Brazil
T +55 11 3318-0050
Latam.support@hikvision.com

Hikvision France
T +33(0)1-85-330-450
info.fr@hikvision.com

Hikvision Spain
T +34-91-737-16-55
info.es@hikvision.com

Hikvision Poland
T +48-22-460-01-50
info.pl@hikvision.com

Hikvision Canada
T +1-866-200-6690
sales.canada@hikvision.com

Hikvision Turkey
T +90 (216)521 7070- 7074
sales.tr@hikvision.com

Hikvision Kazakhstan
T +7-727-9730667
nikia.panfilov@hikvision.ru

Hikvision Tashkent
T +99-87-1238-9438
uzb@hikvision.ru

Hikvision Indonesia
T +62-21-2933759
Sales.Indonesia@hikvision.com

Hikvision Thailand
T +662-275-9949
sales.thailand@hikvision.com

Hikvision Malaysia
T +601-7652-2413
sales.my@hikvision.com

Hikvision Vietnam
T +84-974270888
sales.vt@hikvision.com

Hikvision Hong Kong
T +852-2151-1761
info.hk@hikvision.com

Hikvision Colombia
sales.colombia@hikvision.com

© Hikvision Digital Technology Co., Ltd. 2018 | Data subject to change without notice |

05055220180619